Digital Circuit Exam 2023

Exam Number: 221341

1. Complete the following table (unsigned)

Binary	Octal	Hexadecimal	Decimal	2's complement	1's complem
10110111					
		3F1			

Calculations

$$10110111_2 = (2^7+2^5+2^4+2^2+2^1+2^0)_{10}$$
$$= (128+32+16+4+2+1)_{10}$$
$$= 183_{10}$$
$$183_{10} = (8^2 \cdot 2 + 8^1 \cdot 6 + 8^0 \cdot 7)_{10}$$
$$= 267_8$$
$$183_{10} = (16^1 \cdot 11 + 16^0 \cdot 7)_{10}$$
$$= B7_{16}$$

1's complement

01001000

2's complement

$$\begin{array}{r} 01001000 \\ + \quad 1 \\ \hline 01001001 \end{array}$$

$$3F1_{16} = (16^2 \cdot 3 + 16^1 \cdot 15 + 16^0 \cdot 1)_{10}$$
$$= (768 + 240 + 1)_{10}$$
$$= 1009_{10}$$
$$1009_{10} = (8^3 \cdot 1 + 8^2 \cdot 7 + 8^1 \cdot 6 + 8^0 \cdot 1)_{10}$$
$$= 1761_8$$
$$1009_{10} = (2^9+2^8+2^7+2^6+2^5+2^4+2^0)_{10}$$
$$= 1111110001_2$$

1's complement

0000001110

2's complement

$$\begin{array}{r} 0000001110 \\ + \quad 1 \\ \hline 0000001111 \end{array}$$

Finished table

Binary	Octal	Hexadecimal	Decimal	2's complement	1's comple
10110111	267	B7	183	01001001	010010
1111110001	1761	3F1	1009	0000001111	000000

2. For the logic circuit shown in Fig. 1,

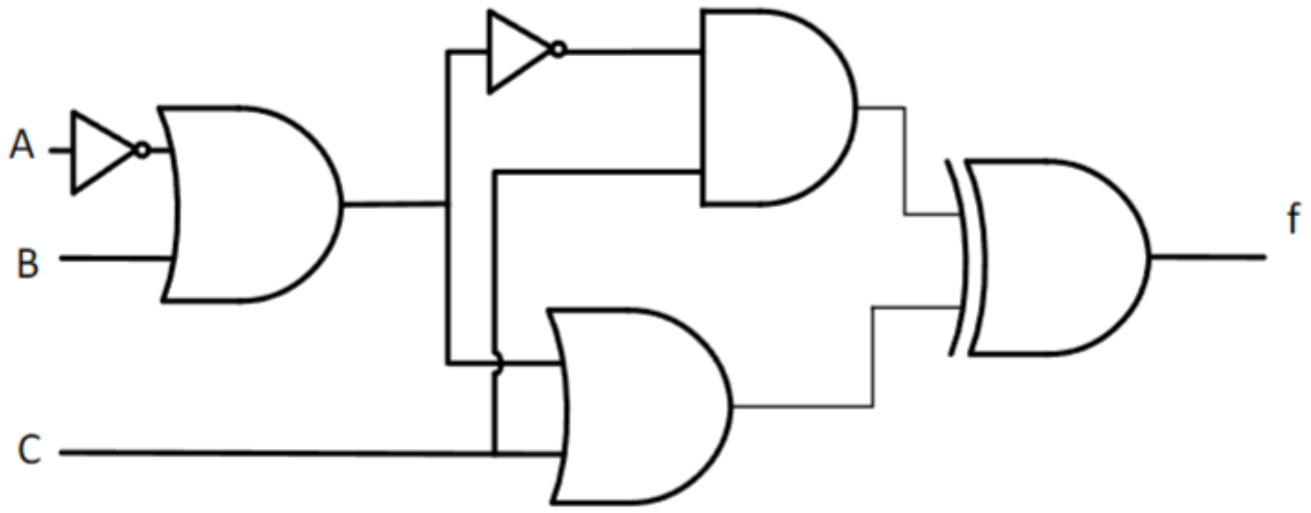

Fig.1. Logic Circuit for f(A,B,C)

a) Implement it using NAND gate only

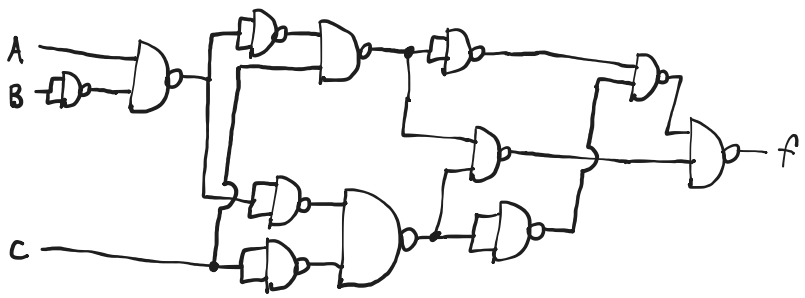

b) Find the Boolean expression for the circuit as f(A,B,C)

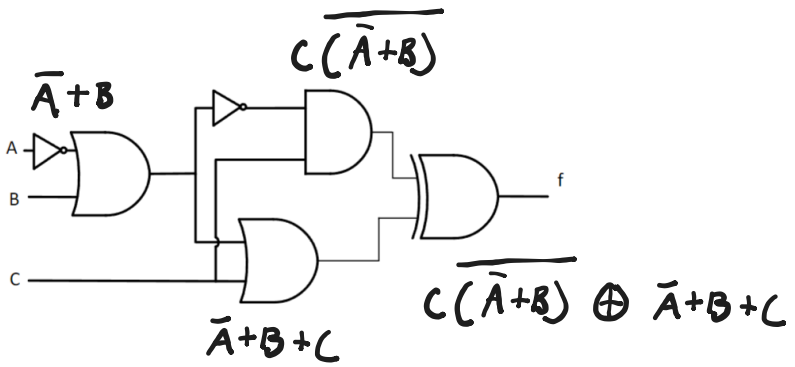

Fig.1. Logic Circuit for f(A,B,C)

The Boolean expression will be

$f(A,B,C) = C(\overline{\bar{A}+B}) \oplus (\bar{A}+B+C)$

c) Simplify the expression using Boolean Algebra

$$
\begin{aligned}
C(\overline{\bar{A}+B}) \oplus (\bar{A}+B+C) &= C(A\bar{B}) \oplus (\bar{A}+B+C) \\
&= (A\bar{B}C)(\overline{\bar{A}+B+C}) + (\overline{A\bar{B}C})(\bar{A}+B+C) \\
&= (A\bar{B}C)(A\bar{B}\bar{C}) + (\bar{A}+B+\bar{C})(\bar{A}+B+C) \\
&= 0 + \bar{A} + \bar{A}B + \bar{A}C + B\bar{A} + B + BC + \bar{C}\bar{A} + \\
&= \bar{A}(1+B+C+\bar{C}) + B(1+C+\bar{C}) + 0 \\
&= \underline{\underline{\bar{A}+B}}
\end{aligned}
$$

d) Re-draw the circuit using simplified expressions

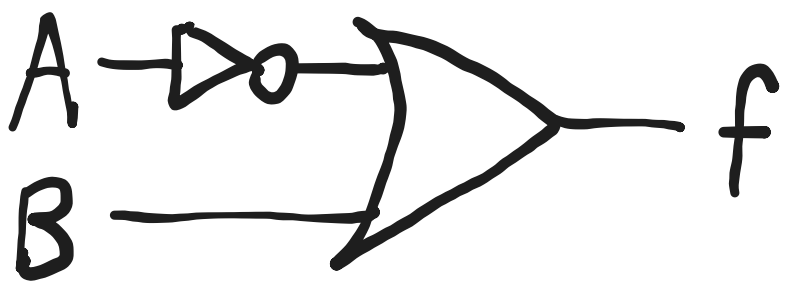

3. Given a digital circuit with four input variable A, B, C, and D, consider the following minterms:

$$f(A,B,C,D) = \sum m(3,5,7,8,10,11,12,14)$$

a) Show the Boolean expression and the corresponding logic gate diagram

Boolean Expression

$$
\begin{aligned}
f(A,B,C,D) &= \bar{A}\bar{B}CD + \bar{A}B\bar{C}D + \bar{A}BCD + A\bar{B}\bar{C}\bar{D} + A\bar{B}C\bar{D} + A\bar{B}C1 \\
&= \bar{A}(\bar{B}CD + B\bar{C}D + BCD) + A(\bar{B}\bar{C}\bar{D} + \bar{B}C\bar{D} + \bar{B}CD + . \\
&= \bar{A}(\bar{B}CD + BD(\bar{C} + C)) + A(\bar{B}\bar{C}\bar{D} + \bar{B}C(\bar{D} + D) + B\bar{D} \\
&= \bar{A}(D(\bar{B}C + B)) + A(\bar{B}(\bar{C}\bar{D} + C) + B\bar{D}) \\
&= \bar{A}(DC + DB) + A(\bar{B}\bar{D} + \bar{B}C + B\bar{D}) \\
&= \bar{A}DC + \bar{A}DB + A\bar{B}C + A(\bar{D}(\bar{B} + B)) \\
&= \bar{A}DC + \bar{A}DB + A\bar{B}C + A\bar{D}
\end{aligned}
$$

Logic Gate Diagram

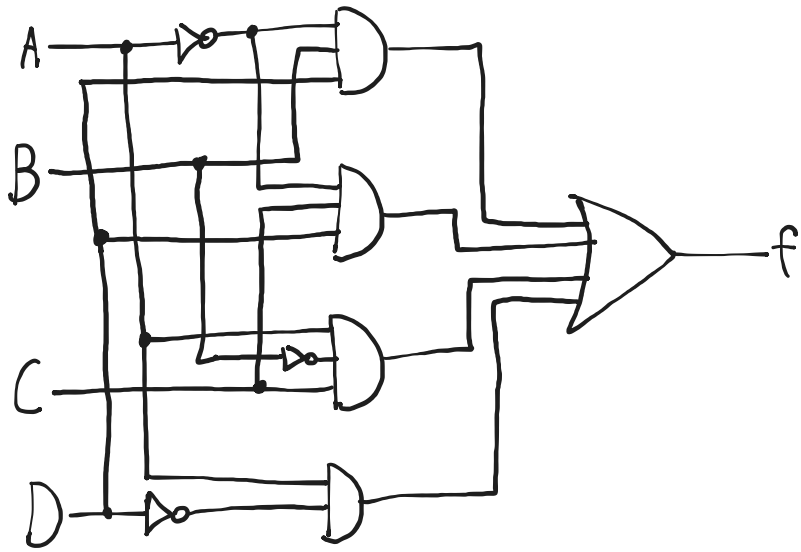

b) Simplify it using K-MAP if possible and re-draw the logic diagram

It can be reduced to the same expression calculated beforehand, so refer to previous figure for logic diagram.

$$f(A,B,C,D) = A\bar{D} + \bar{A}CD + \bar{A}BD + A\bar{B}C$$

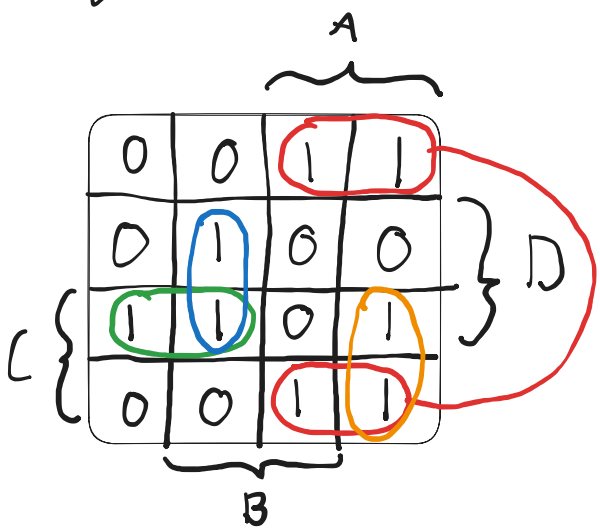

c) Redesign the circuit using a decoder and OR gates. Provide a detailed diagram

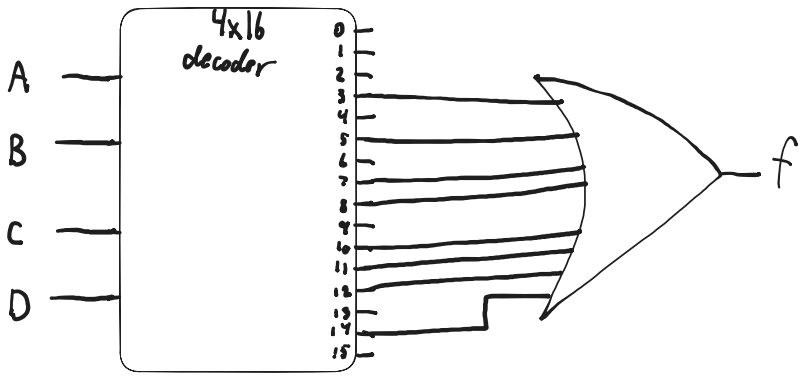

d) Implement the same function using a 4-to-1 multiplexer. Specify the inputs to the multiplexer and illustrate the setup.

A 4x1 multiplexer has 2 inputs, which are set as A and B. The design will then look as follows:

A	B	C	D	f	
0	0	0	0	0	CD
0	0	0	1	0	
0	0	1	0	0	
0	0	1	1	1	
0	1	0	0	1	D
0	1	0	1	1	
0	1	1	0	1	
0	1	1	1	1	
1	0	0	0	0	$C+\overline{D}$
1	0	0	1	0	
1	0	1	0	0	
1	0	1	1	0	
1	1	0	0	0	$\overline{D}$
1	1	0	1	0	
1	1	1	0	0	
1	1	1	1	0	

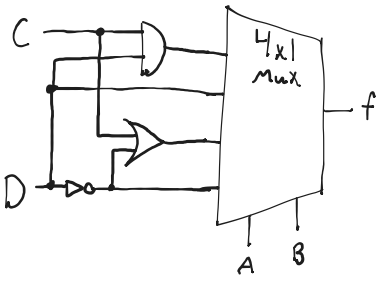

4. Create a state diagram for a sequence detector that outputs a 1 when it detects the final bit in the serial data stream 1101

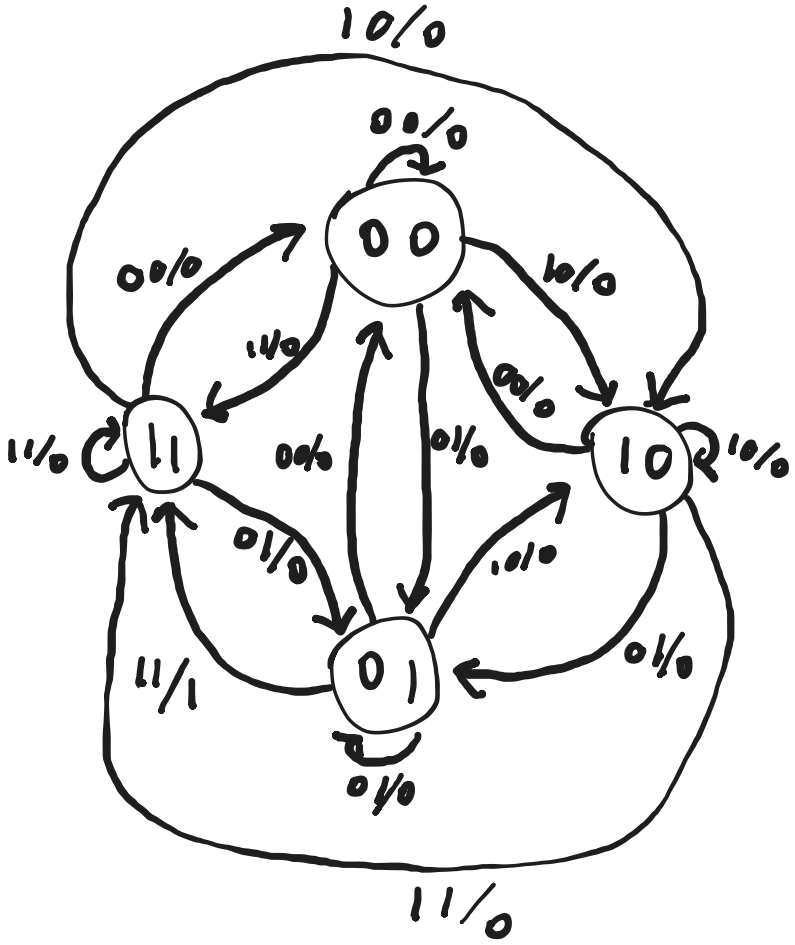

5. Implement the following state diagram (Fig. 2) using two Flip-Flops (One JK and one T Flip Flop)

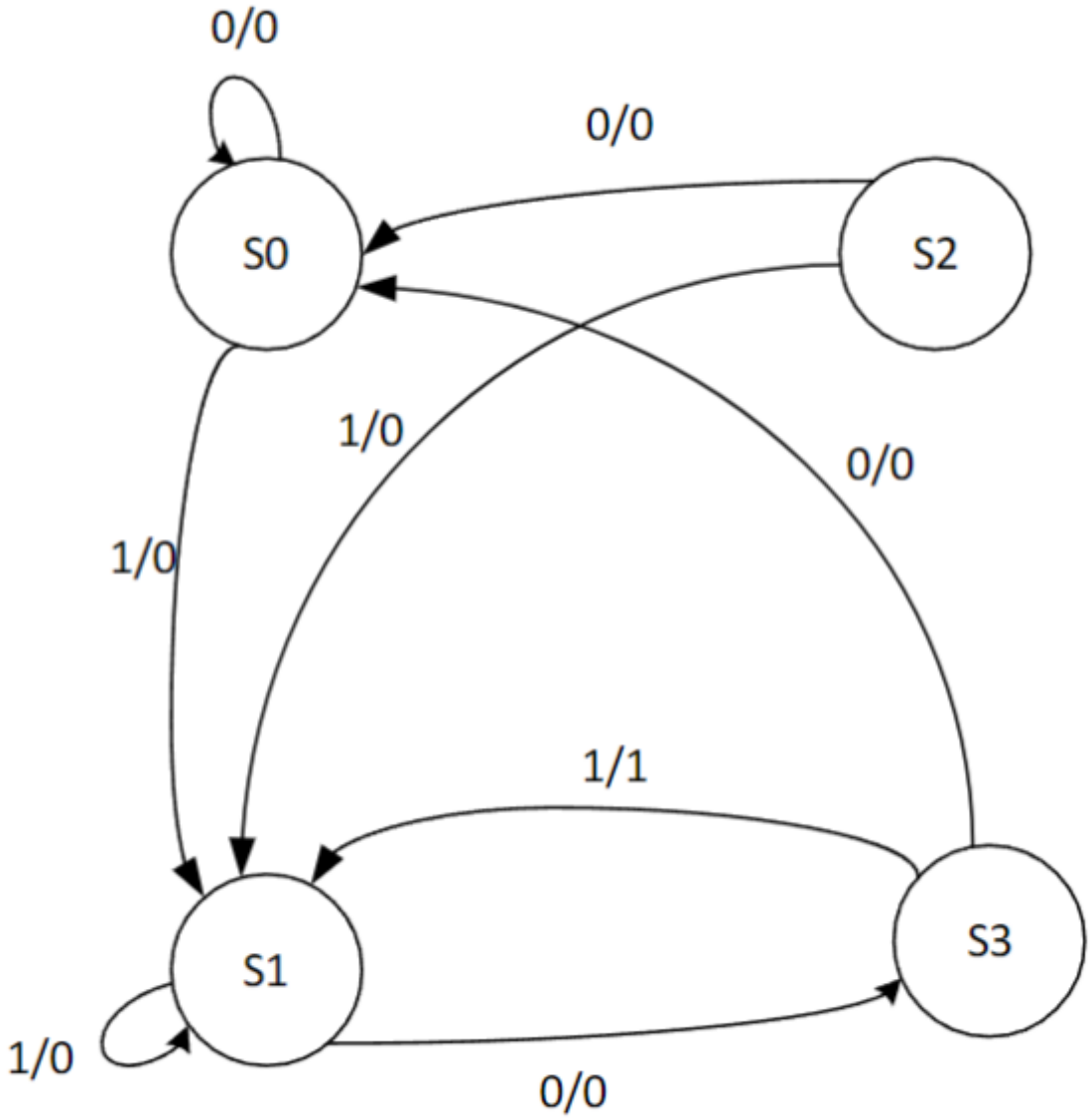

Fig. 2. State diagram of Question 5.

State Table

As can be seen below, S0 and S2 have the exact same properties, so the state table can be reduced by eliminating S2 entirely (since nothing goes to that state either).

Present state	Next state		Output	
	x=0	x=1	x=0	x=1
S0	S0	S1	0	0
S1	S3	S1	0	0
~~S2~~	~~S0~~	~~S1~~	~~0~~	~~0~~
S3	S0	S1	0	1

Binary State Table

Here the state table is written out in binary with the flip flop inputs. Since it isn't stated where the state machine starts, it could start in S2 in which case it would have to be able to escape, so it is included anyway.

	Present state		Input	Next state		Output	Flip Flops		
	A	B	x	A	B	y	J_A	K_A	T_B
S0	0	0	0	0	0	0	0	X	0
	0	0	1	0	1	0	0	X	1
S1	0	1	0	1	1	0	1	X	0
	0	1	1	0	1	0	0	X	0
S2	1	0	0	0	0	0	X	1	0
	1	0	1	0	1	0	X	1	1
S3	1	1	0	0	0	0	X	1	1
	1	1	1	0	1	1	X	1	0

K-Maps

$J_A = B$

x \ A	0	1	X	X
0	0	0	X	X

B

$K_A = '1'$

x \ A	X	X	1	1
X	X	1	1	1

B

$T_B = \bar{B}x + AB\bar{x}$

x \ A	0	0	1	0
1	1	0	0	1

B

$y = ABx$

x \ A	0	0	0	0
0	0	0	1	0

B

6. For the following clocked sequential circuit with one input (X) and one output (Z), derive the Boolean expression for A (t+1), B (t+1), C (t+1), and Z (Fig. 3). QA, QB, and QC are equivalent to A, B, and C, respectively

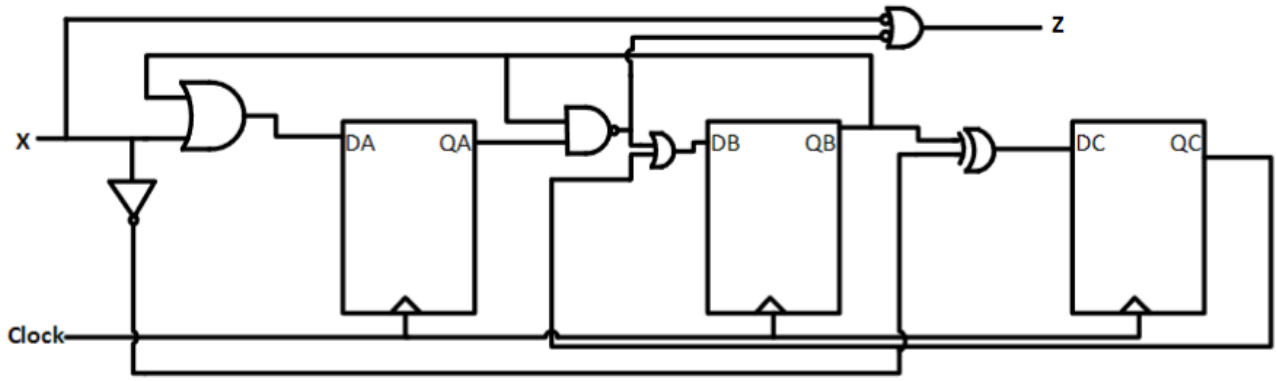

Fig.3. Sequential circuit for Question 6.